Atlantium®
Hydro-Optic Water Disinfection System

System Installation Guide:

RZ/PG163-13

RZ/PG163-14

RZ/PG163-22

RZ/PG163-23

RZ/PG163-24

Atlantium
Illuminating Water Technologies

Copyright © 2010 Atlantium Technologies Ltd. All rights reserved.

- Publication Catalog No. PBF003300, Revision A, August 2010
- System and accessory specifications subject to change without notice

Atlantium and the Atlantium Logo are Trademarks and/or Registered Trademarks of Atlantium Technologies Ltd., its subsidiaries or affiliates in the United States and/or other countries. *All other company or product names are the trademarks or registered trademarks of their respective holders.* All rights not expressly granted are reserved.

The information contained in this document is proprietary and confidential information of Atlantium. Any unauthorized reproduction, use or disclosure of this material, or any part thereof, is strictly prohibited. This document and information is intended solely for authorized Atlantium's customers as permitted by Atlantium and for the limited purposes set forth herein.

UL and HydroQual compliances are model dependent.

For more information please visit Atlantium's website at: http://www.atlantium.com/

Contact information for equipment manufacturer and technical services:
Atlantium ltd.
Har Tuv Industrial Park
P.O.B. 11071
Bet Shemesh 99100, Israel
USA & Canada: 1-866-934-9283
Outside USA & Canada: + 972-2-999-9160

UL 508, UL 1563
E113027

TABLE OF CONTENTS

Introduction 5
Scope of this Guide 5
System Installation 6
Transportation 6
Removal from the Truck 6
Atlantium Unit Handling Requirements 7
Pipe Fitting Arrangements 9
System Schematic Diagram 10
Electrical Connections 11
Positioning the Electrical Cabinet 11
Installing the Main Power Cable 12
Electrical Wiring Harness Connections 13
Single-Branch Unit: RZ163-13 13
Single- and Dual-Branch Units: RZ163-14 / 22 / 23 & 24 14
Flow Meter Installation 18
Connecting the Flow Meter 18
Flow Switch Installation 20
Connecting the Flow Switch 21
Additional Flow Switches Option 22
Connecting the Remote Controller to the Electrical Cabinet 25
Connecting the Remote Alarm to the Electrical Cabinet 26
Connecting the Auto Valves to the Electrical Cabinet 27
Sampling Valve Installation 29
CIP and Draining Valves Installation 30
Cleaning the Unit 30
Starting Up the Unit 31
Determination of the Free-Chlorine Alarm Threshold 32
Mass-Concentration Monitoring 32
ORP Monitoring 32
System Specifications and Schematics 33

TABLE OF FIGURES

Figure 1: Lifting Strap Locations for the RZ163-14 Unit (for Illustration purposes only) 7
Figure 2: Unit to Water Flow Orientation for the RZ163-14 Unit (for Illustration purposes only) 8
Figure 3: Connecting the Unit to the Water Line – Flange Fitting 8
Figure 4: Connecting the Unit to the Water Line – Tri-Clamp Fitting 9
Figure 5: Recommended Atlantium System Setup 10
Figure 6: Main Power Cable Connection..... 12
Figure 7: Wiring Harness Connections: RZ163-13 Unit 13
Figure 8: Wiring Harness Connections: RZ163-14/22/23/24 Units 15
Figure 9: Figure 10: Terminal Bar Port Designations and Parameters 16
Figure 11: Flow Meter Connections (for illustration purposes only) 19
Figure 12: Flow Switch Installation 20
Figure 13: Flow Switch Connections 21
Figure 14: Additional Flow Switch Connections (1)..... 22
Figure 15: Additional Flow Switch Connections (2)..... 23
Figure 16: Additional Flow Switch Connections (3)..... 23
Figure 17: Additional Flow Switch Connections (4)..... 24
Figure 18: Remote Controller Connections 25
Figure 19: Remote Alarm Connections 26
Figure 20: Auto Valves Connections 28
Figure 21: Sampling Valve Assembly..... 29
Figure 22: CIP and Draining Valves Installation..... 30
Figure 23: Lamp Breather Caps 31

INTRODUCTION

The system is shipped directly from the factory to your site. Your Atlantium representative will be present for the commissioning of the system to ensure that it is working properly before use. In addition, Atlantium provides in-service and training to ensure that your staff is experienced with the performance and safety considerations of the system. Thereafter, you or the staff at your facility will be performing the daily operation and maintenance routines associated with the system.

SCOPE OF THIS GUIDE

This guide discusses system installation aspects and procedures for the following Atlantium Hydro-Optic water disinfections systems[1]:

1. **RZ/PG163-13**
   Single-branch unit with three UV lamps, with or without the ultrasound cleaning system[1].

2. **RZ/PG163-14**
   Single-branch unit with four UV lamps, with or without the ultrasound cleaning system[1].

3. **RZ/PG163-22**
   Dual-branch unit system with two UV lamps in each branch, with or without the ultrasound cleaning system[1].

4. **RZ/PG163-23**
   Dual-branch unit system with three UV lamps in each branch, with or without the ultrasound cleaning system[1].

5. **RZ/PG163-24**
   Dual-branch unit system with four UV lamps in each branch, with or without the ultrasound cleaning system[1].

[1] System configurations and specifications subject to change without notice

SYSTEM INSTALLATION

Transportation

The Atlantium system is shipped in separate wooden crates:

- The unit(s) – if a dual-branch or larger system has been ordered, each unit will be crated separately.
- The electrical cabinet – if a dual-branch or larger system has been ordered, each cabinet will be crated separately.
- Peripheral accessories will be crated according to their size and weight. Small accessories may be crated together.

Each of the crates is connected to a forklift-friendly wooden pallet.

A forklift should be ready when the Atlantium system arrives, in order to lift the crates off the truck and – after the system's components are uncrated – to carry them to the installation site.

Removal from the Truck

Using the forklift, the crated components of the system must be lifted off the truck's bed and lowered to a level ground surface by a qualified forklift operator.

Important Note

Any damage to the crates or to the system, found before opening the crates or during unpacking, installing or testing of the system, should be immediately reported to Atlantium and to the insurance carrier.

Atlantium Unit Handling Requirements

1. Unclamp and remove the crate's top panel.
2. The unit should be lifted by two straps looped around the end fittings, and joined by a third central strap that will be connected to the forklift, as shown in Figure 1.
3. Ensure that all straps are connected securely to the unit, to each other and to the forklift.
4. Employing the forklift to lift the unit by the straps, lift the unit out of the crate and lower it to near-ground level (for safety).
5. Carry the unit to its intended location, carefully lower it to the surface and bolt it to the intended surface with the supplied bolts, washers & lock washers.

Caution

The Atlantium RZ/PG163 units are heavy – refer to the appropriate system specifications document (PBG006400). The unit should be lifted and carried by mechanical means.

Important Note

The Atlantium RZ/PG163 units are not symmetric – the arrow imprinted on the unit must point in the direction of the water flow (see Figure 2).

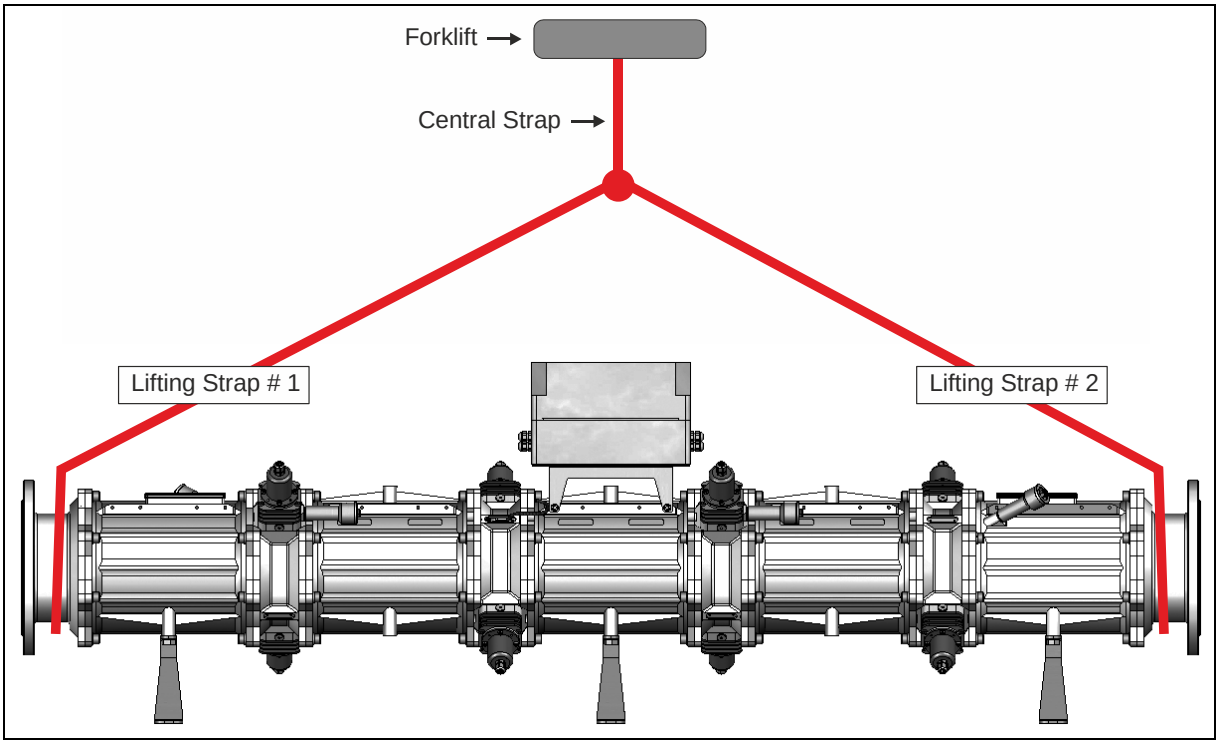

Figure 1: Lifting Strap Locations for the RZ163-14 Unit (for Illustration purposes only)

6. The unit should be installed such that the UVT analyzer is oriented in the same direction as the flow of the water (see Figure 2).

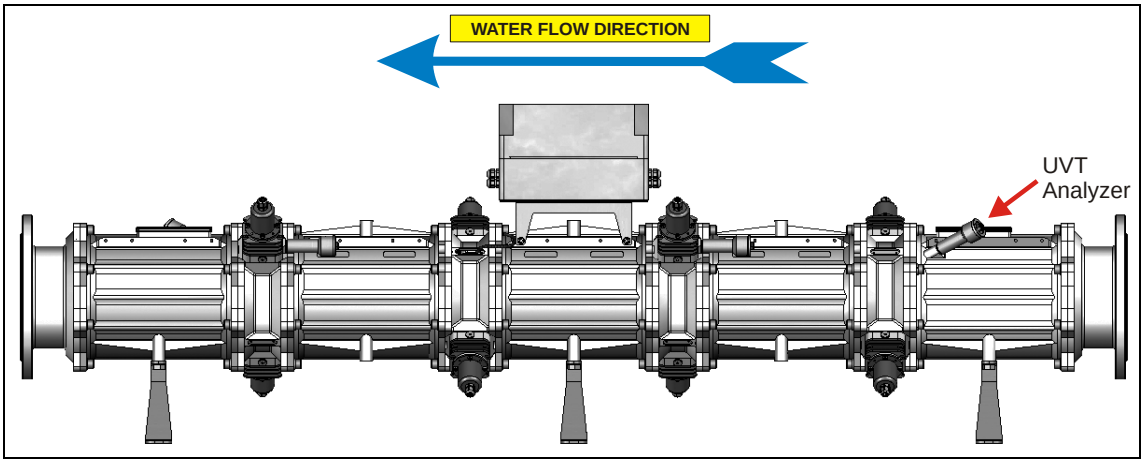

Figure 2: Unit to Water Flow Orientation for the RZ163-14 Unit (for Illustration purposes only)

7. Bolt the flanged fitting on one side of the unit to the flanged fittings of the facility's pipes with the eight (8) sets of supplied bolts/nuts/flat & lock washers, as shown in Figure 3 – **do not** tighten the hardware.

8. Bolt the flanged fitting on the other side of the unit to the flanged fittings of the facility's pipes.

9. Tighten the fastening hardware so that the torque pressure around the flanged fittings is even, and the unit is firmly connected to the facility's water line.

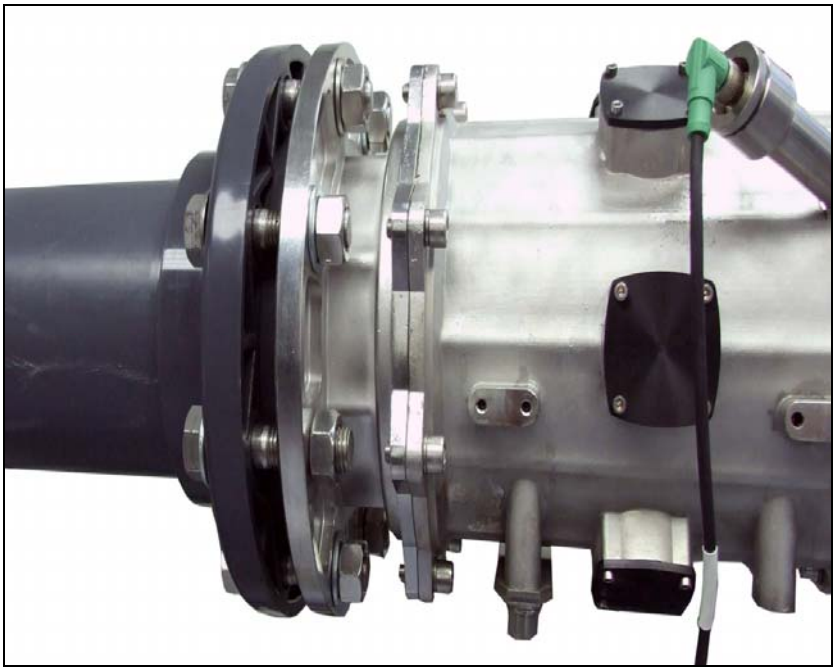

Figure 3: Connecting the Unit to the Water Line – Flange Fitting

Pipe Fitting Arrangements

RZ Systems: Tri-clamp fittings on your Atlantium RZ unit are available upon request (see Figure 4).

PG Systems: Atlantium PG units are equipped with Tri-clamp fittings (see Figure 4).

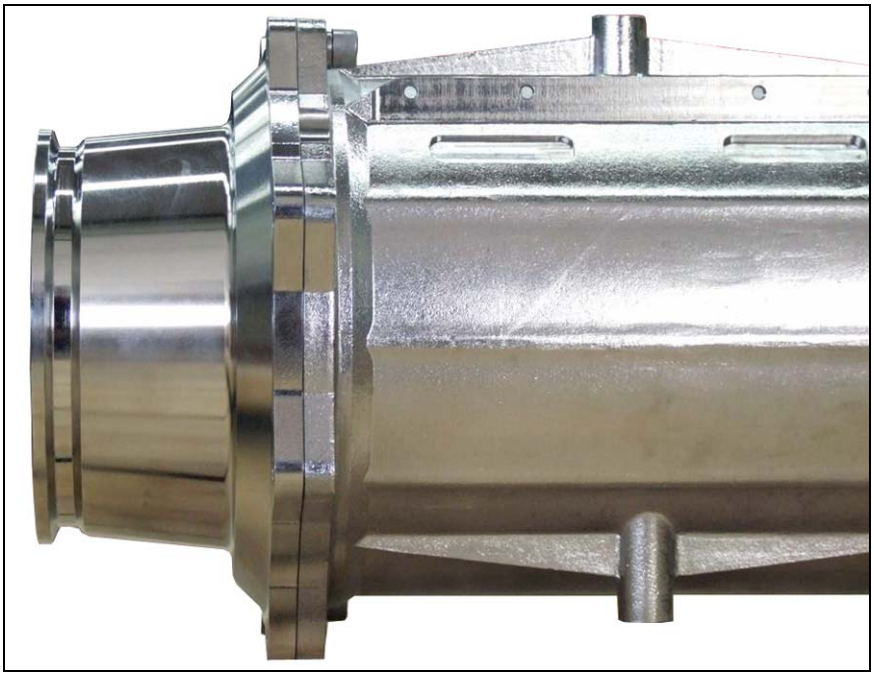

Figure 4: Connecting the Unit to the Water Line – Tri-Clamp Fitting

System Schematic Diagram

Figure 5 presents a block diagram of the **recommended** Atlantium unit setup (for alternate or site specific setup – consult Atlantium's application engineer):

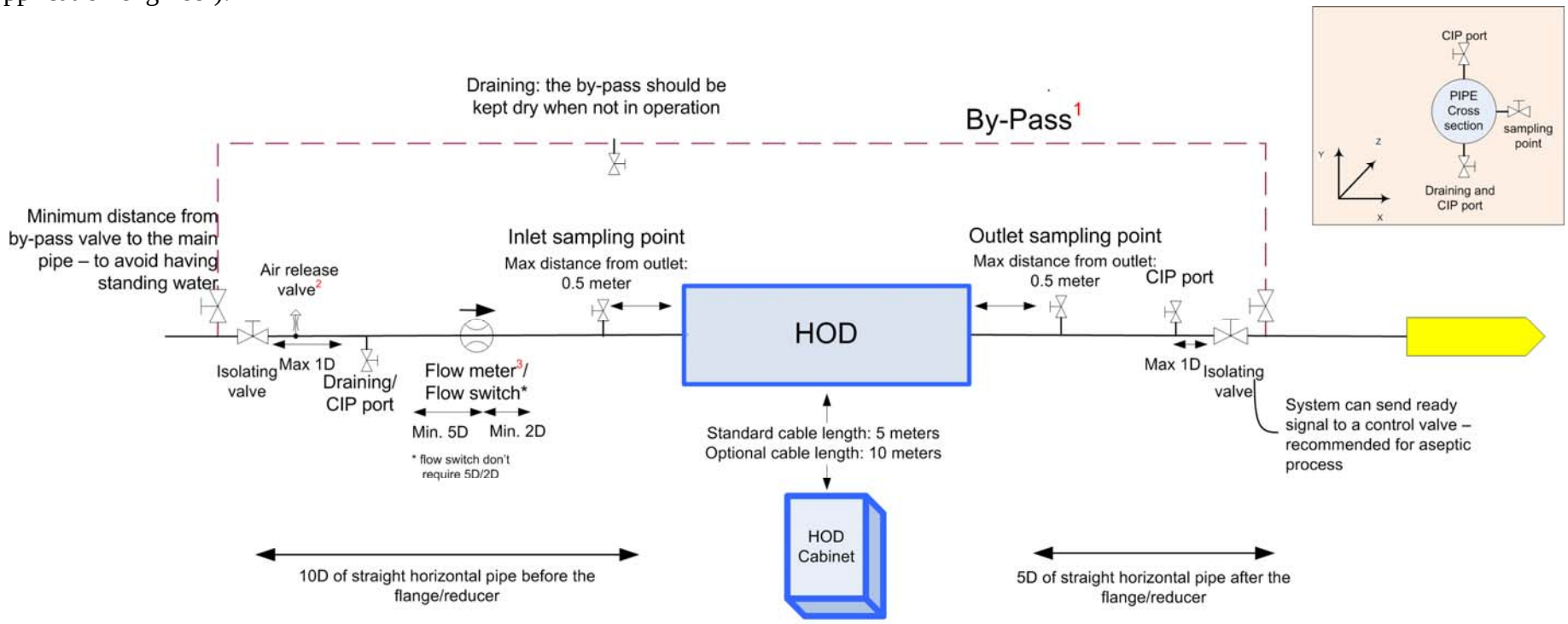

(1) Not allowed in municipal systems.
(2) Air release valve(s) should be installed in appropriate location(s) in order to avoid air bubbles.
(3) - Flow meter with submerged moving parts: must be outside 10D straight pipe section.
- Magnetic inducing flow meter: OK inside 10D straight pipe section.

Figure 5: Recommended Atlantium System Setup

Electrical Connections

Warning

The electrical connections must be performed only by a qualified electrical engineer!

Positioning the Electrical Cabinet

1. Uncrate the electrical cabinet and move it to its intended location, the distance between the unit and the electrical cabinet will be determined by the cable's length and its routing.

Caution

The electrical cabinet of the RZ/PG163 system is heavy – refer to the appropriate system specifications document (PBG006400). It should be lifted and carried by mechanical means.

Important Note

- The harness length between the unit and the electrical cabinet is 5 meters / 16.5 ft.
- An optional 10 meter / 33 ft. cable is available upon request.

2. The electrical cabinet must have at least 50 cm (20 inches) of clearance on its right and left sides for proper ventilation.

Important Note

The electrical cabinet may be equipped with an auxiliary air conditioning unit[2] to controls the cabinet's internal temperature in warm climate areas.

Complete operation and maintenance instructions may be found in the air conditioning unit's manual, located in the document tray inside the cabinet's front door.

[2] Optional Purchase Equipment

Installing the Main Power Cable

> ***Warning***
>
> The main power cable must be installed and connected only by a qualified electrical engineer!

The following instructions are for connecting a three-phase main power cable to the electrical cabinet. The power cable and connecting plug are to be obtained locally. Connect the power cable to the electrical cabinet as shown in Figure 6.

A standard three-phase cable incorporates five internal wire leads, labeled as follows:

R or **1**, **S** or **2**, **T** or **3**, **N** (neutral) and **Ground** (green/yellow)

Connect the power cable to the electrical cabinet as shown in Figure 6:

1. Insert the end of the power cable into the cabinet through the designated hole in the cabinet's left-side panel (**A**) and fasten the cable gland's plastic nut.

2. Connect the cable's three power leads to the power terminal bar (**B**):

- Connect the lead labeled **R** or **1** to the **L1** terminal port
- Connect the lead labeled **S** or **2** to the **L2** terminal port
- Connect the lead labeled **T** or **3** to the **L3** terminal port

3. Connect the neutral (blue) lead to the **L2** terminal port.

4. Connect the ground (green/yellow) lead to the **PE** terminal port (colored green/yellow).

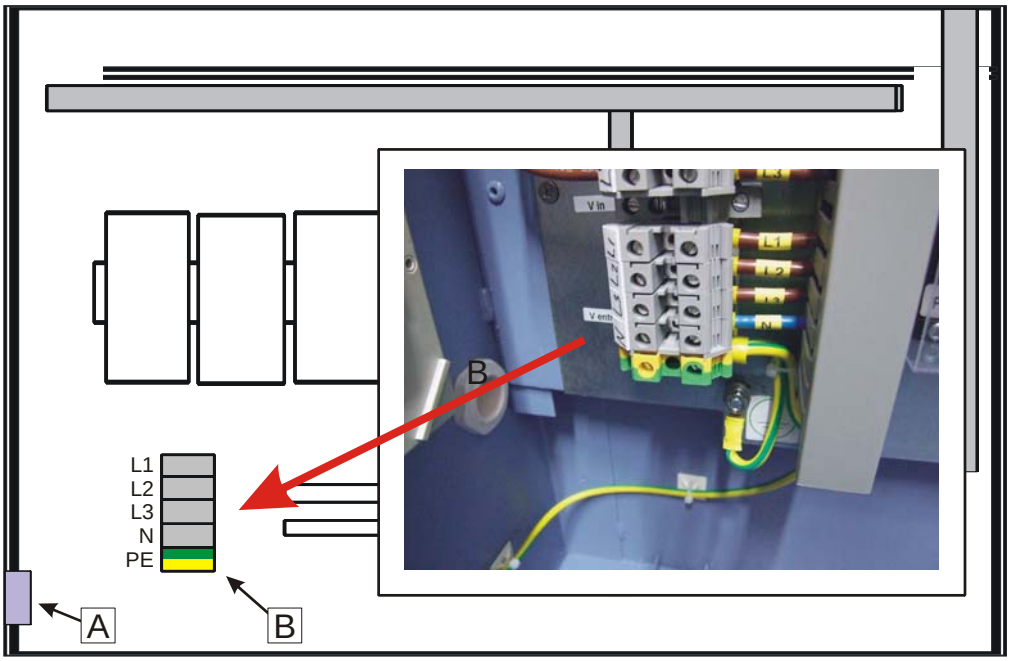

Figure 6: Main Power Cable Connection

Electrical Wiring Harness Connections

Single-Branch Unit: RZ163-13

1. Insert the end of the harness into the cabinet through the hole in the cabinet's right-side panel and fasten the cable gland's plastic nut (**1**).

2. The UV lamp's bundle of wire leads in the harness terminates in a single female connector, and each connector is labeled **Lamp 1**, **Lamp 2** or **Lamp 3**. Connect each of these labeled connectors to its appropriate **Lamp** connection port in the cabinet (**2**).

3. Connect the female connector for the ultrasound cleaning system[3] to the appropriate connection port (**3**).

4. Connect the ground wire lead (green/yellow) to any free **PE** connection terminal (**4**).

5. Connect the green communication cables' socket connectors for the **SerIO** (Serial Input/Output cards to the appropriate connection ports (**5**).

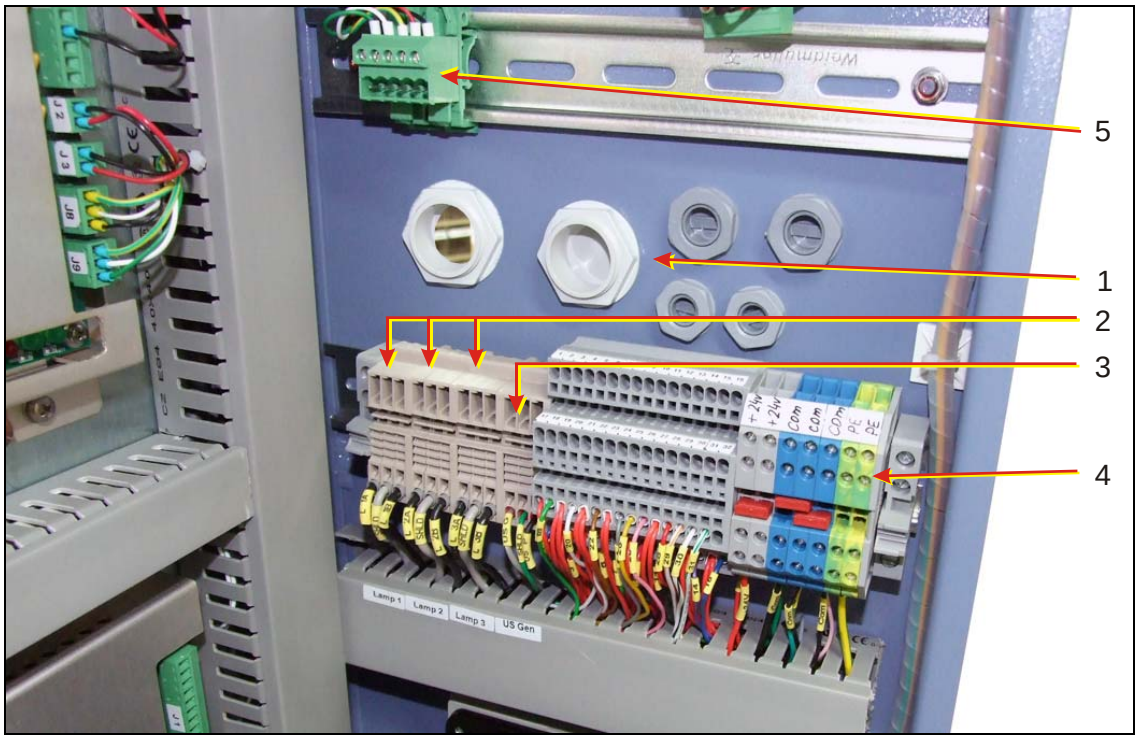

Figure 7: Wiring Harness Connections: RZ163-13 Unit

[3] Optional Purchase Equipment

Single- and Dual-Branch Units: RZ163-14 / 22 / 23 & 24

Each branch of a multiple-branch unit is connected to the cabinet by its own wiring harness bundle. Connect the wiring harness bundle(s) from the unit(s) to the electrical cabinet as follows (refer to Figure 8):

1. Insert the end of the harness into the cabinet through the designated hole in the cabinet's right-side panel and fasten the cable gland's plastic nut (**1**).

2. Each UV lamp's bundle of wire leads in the harness terminates in a single female connector, and each connector is labeled **Lamp 1**, **Lamp 2**, etc. Connect each of these labeled connectors to its appropriate **Lamp** connection port in the cabinet (**2**).

3. Connect the female connector(s) – one per branch – for the ultrasound cleaning system[4] to the appropriate connection ports (**3**).

4. Connect the green communication cables' socket connectors – one per branch – for the **SerIO** (Serial Input/Output cards to the appropriate connection ports (**4**).

5. Connect the ground wire lead (green/yellow) to any free **PE** connection terminal (**5**).

[4] Optional Purchase Equipment

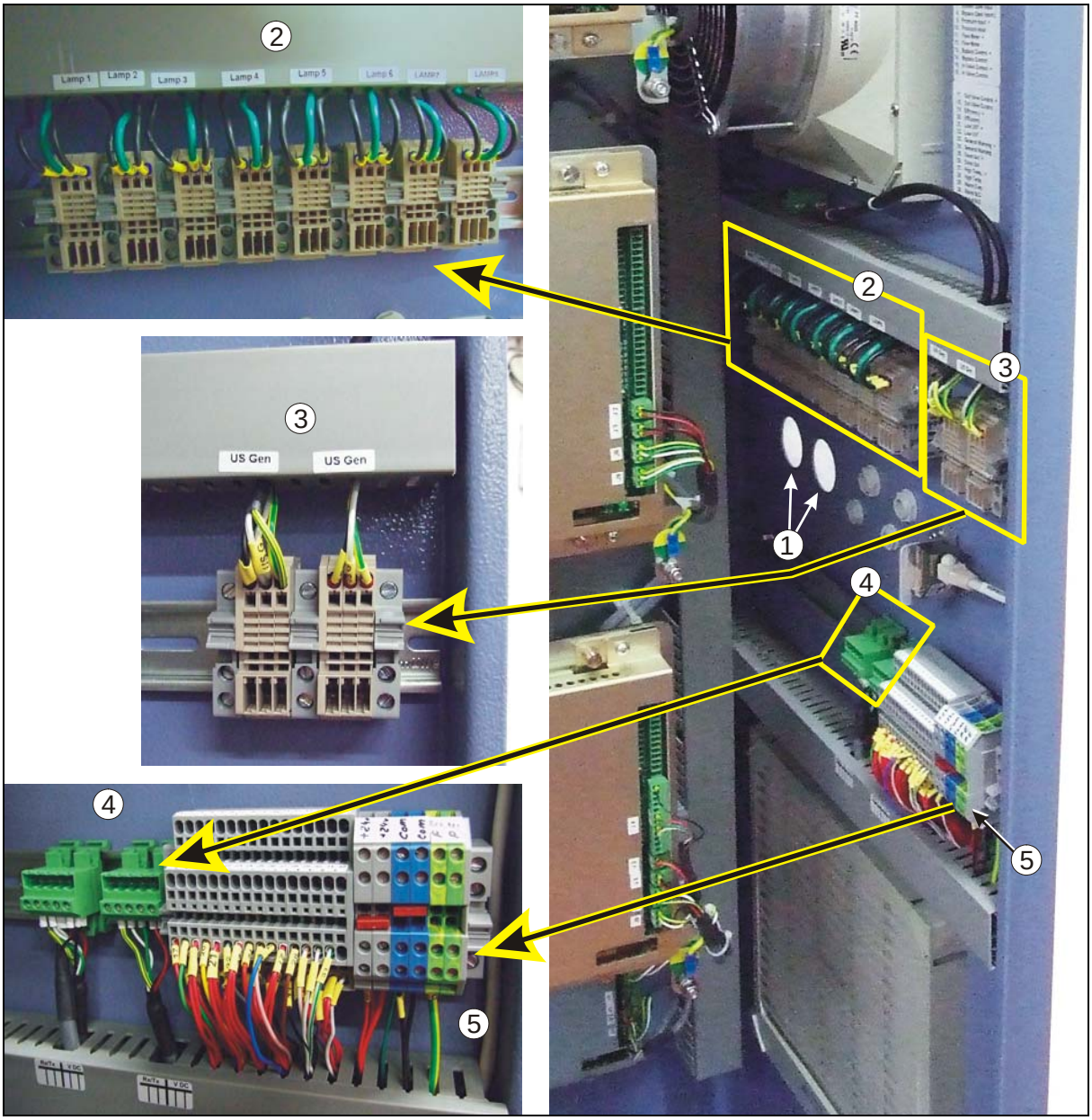

Figure 8: Wiring Harness Connections: RZ163-14/22/23/24 Units

The illustration of the electrical cabinet's terminal bar shown in Figure 9 describes the nature of the bar's connection ports.

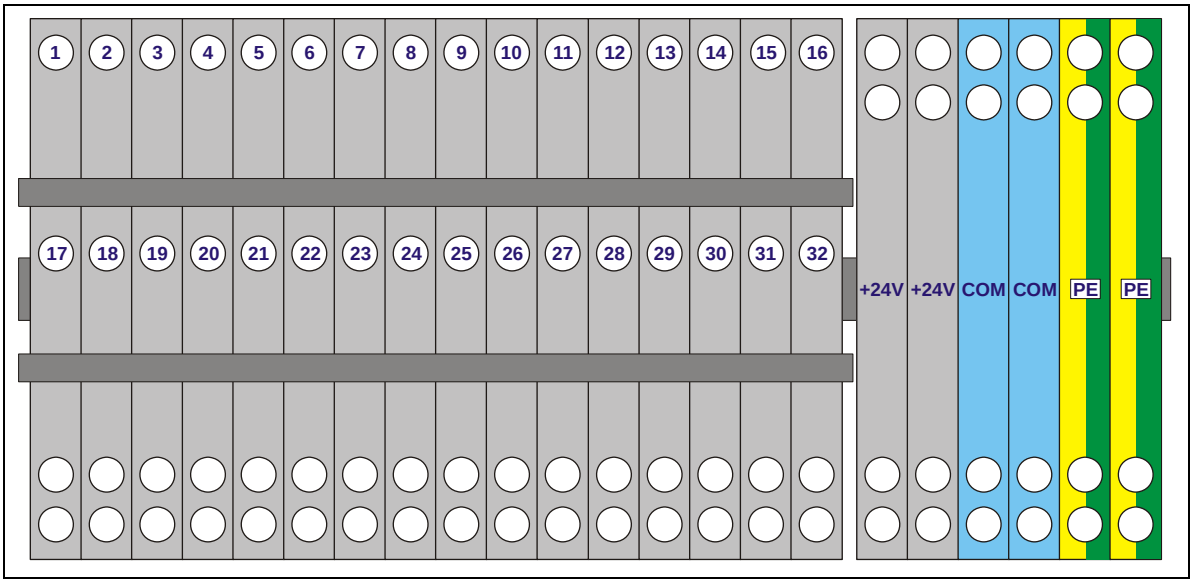

Figure 9: Figure 10: Terminal Bar Port Designations and Parameters

Port #	Name	Expansion Kit Required Y/N **	Signal Parameters			
			Direction *	Type	Voltage	Current [mA]
1	Flow Switch 1	No	Input	Dry	24 VDC	18
2	Flow Switch 2					
3	Low Normal Input 1	No	Input	Dry	24 VDC	18
4	Low Normal Input 2					
5	On/Off Input +		Input	Isolated	Off 4VDC On 10÷60DC	50mA @ 60V
6	On/Off Input –					
7	Spare					
8	Spare					
9	Pressure Input +	No	Input	Analog	N/A	4 – 20
10	Pressure Input –					
11	Flow Meter +	No	Input	Analog	N/A	4 – 20
12	Flow Meter –					
13	Bypass Control +	No	Output	Sink	24 VDC	Max 1500
14	Bypass Control –					
15	In Valve Control +	No	Output	Sink	24 VDC	Max 1500
16	In Valve Control –					
17	Out Valve Control Ready +	Valve – No	Output	Sink	24 VDC	Max 1500
18	Out Valve Control Ready –	Ready – Yes	Output	Dry	24 VDC	Max 1500
19	Low Status Output +	Yes	Output	Dry	24 VDC	Max 1500
20	Low Status Output –					
21	Low UVT +	Yes	Output	Dry	24 VDC	Max 1500
22	Low UVT –					

(*) Input = into Atlantium system
Output = from Atlantium system to customer's controller

Port #	Name	Expansion Kit Required Y/N **	Signal Parameters			
			Direction *	Type	Voltage	Current [mA]
23	Shutdown Warning Output +	Yes	Output	Dry	24 VDC	Max 1500
24	Shutdown Warning Output –					
25	Dose Out +	Yes	Output	Analog	N/A	4 – 20
26	Dose Out –					
27	High Temperature +	Yes	Output	Dry	24 VDC	Max 1500
28	High Temperature –					
29	Alarm Com.	No	Output	Dry	24 VDC	Max 1500
30	Alarm N.C.					
31	Alarm N.O.					
32	Spare					

(*) Input = into Atlantium system
Output = from Atlantium system to customer's controller

(**) Important Note

The port signals marked "Yes" require expansion kits to operate; consult with your Atlantium representative for more information.

Flow Meter Installation

Install the flow meter in strict accordance with the instructions supplied by the flow meter's manufacturer. Refer to the RZ Product Line Site Preparation Guide (PB0004800) for information regarding the flow meters recommended by Atlantium.

Refer to the Local Controller Operations Guide (PB0002500) for flow meter configuration instructions in the system's software application.

Important Note

- A flow meter ***or*** a flow switch is required for system operation.
- The flow meter or flow switch must be installed on the **inlet** side of the unit.

Connecting the Flow Meter

The following instructions cover the wiring connections of the Krohne flow meter to the unit's electrical cabinet:

- The connections described on the side of the electrical cabinet are the **required** connection points designed by Atlantium for the flow meter.
- The connections described on the side of the flow meter are **recommended** by Atlantium. Detailed connection instructions are published by the manufacturer in the signal converter's installation manual. That manual may be viewed or downloaded from Krohne's website at: http://www.krohne.com/html/dlc/HB_IFC300_en_061215.pdf

Carefully follow the electrical connection instructions as they appear in the flow meter's installation manual. In general, the connections for the various unit models are described and illustrated as follows (refer to Figure 11).

1. The first wire lead (of four) should connect between one of the **+24V** terminals on the main terminal bar in the electrical cabinet, and the **L** connector in the flow meter's connection plate (see **blue** arrow).

2. The second wire lead (of four) should connect between one of the **COM** terminals on the main terminal bar in the electrical cabinet, and the **N** connector in the flow meter's connection plate (see **red** arrow).

3. The third wire lead (of four) should connect between one of the **+24V** terminals on the main terminal bar in the electrical cabinet, and the **A** connector in the flow meter's connection plate (see **black** arrow).

4. The fourth wire lead (of four) should connect between the **Flow Meter +** terminal (**11**) on the main terminal bar in the electrical cabinet, and the **A-** connector in the flow meter's connection plate (see **green** arrow).

5. Connect the flow meter's two external black ground wires to the connecting pipe sections, one on each side of the meter (see Figure 11).

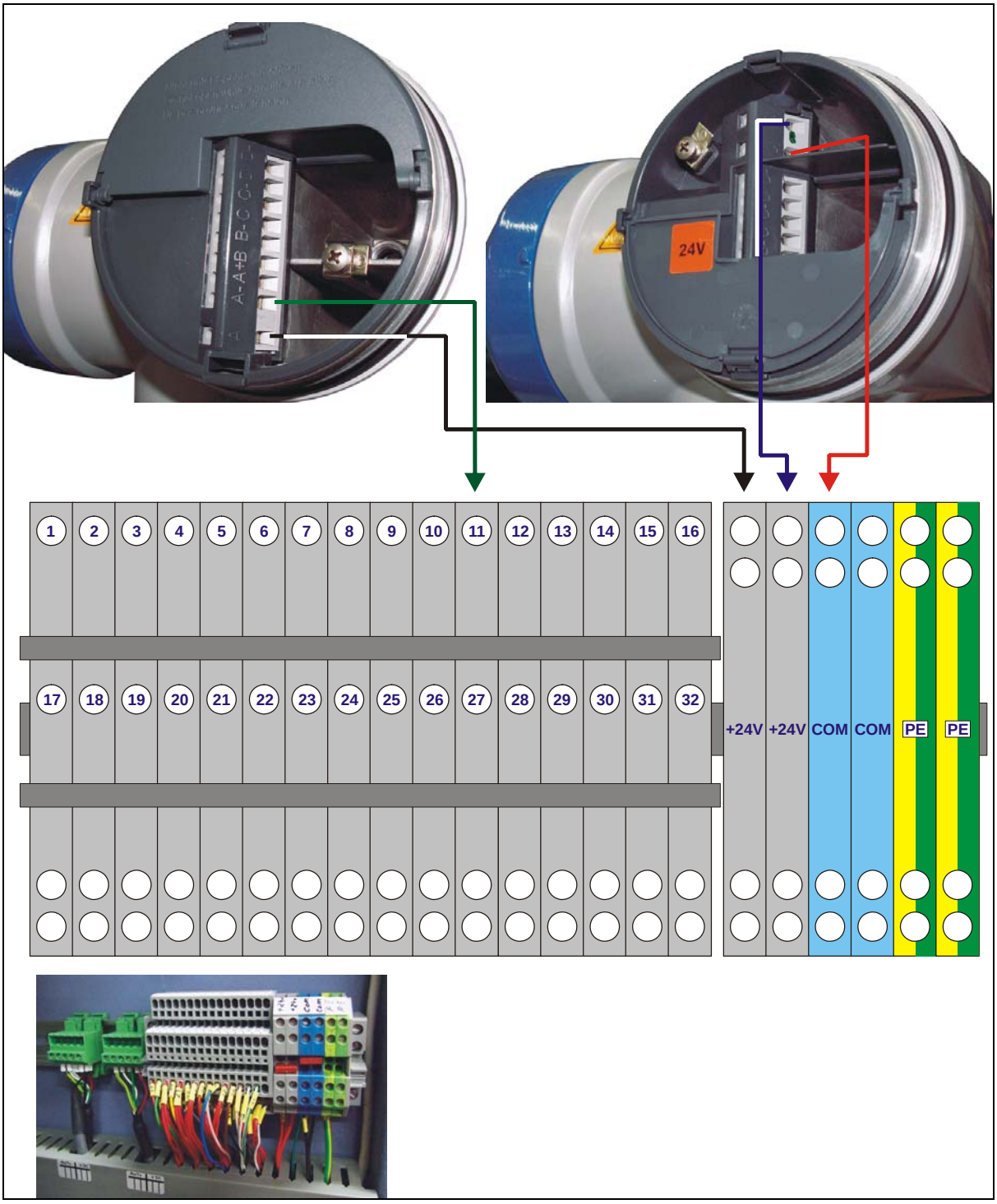

Figure 11: Flow Meter Connections (for illustration purposes only)

Flow Switch Installation[5]

The socket for the flow switch must be welded in strict accordance with all appropriate sanitary standards which will prevent rust as well as bio-fouling buildup.

Install the flow switch by inserting the vane into the threaded port, and screwing it tight. White plumbing tape should be used to ensure a watertight seal.

Important Note

- The flow switch must be installed on the **inlet** side of the unit.
- The flow switch must be installed in a vertical (12:00 o'clock) orientation.
- The flow switch's final position should be set with the index arrow pointing in the direction of the water's flow through the unit.

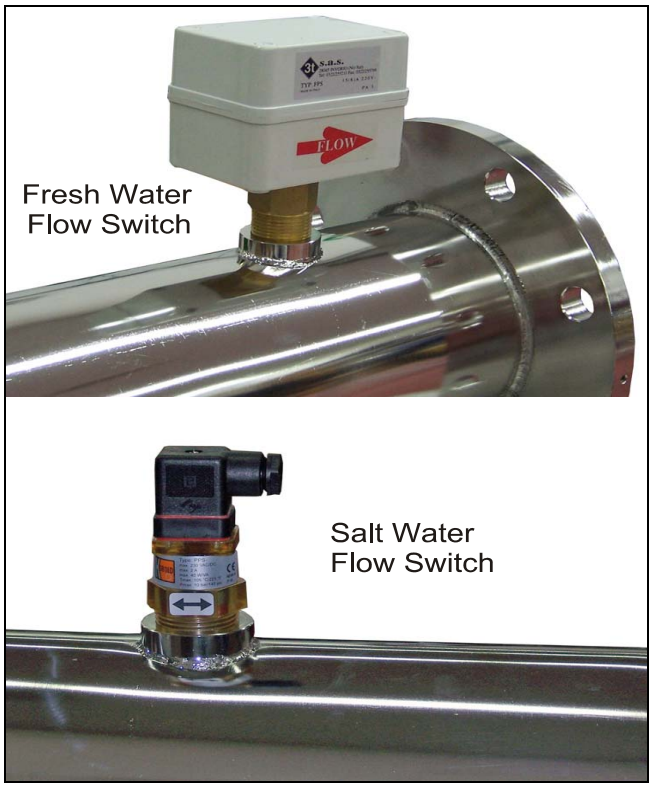

Figure 12: Flow Switch Installation

[5] A flow meter ***or*** a flow switch are required for system operation

Connecting the Flow Switch

Refer to Figure 13:

1. Connect the **Common** lead to the **Flow Switch 1** terminal on the main terminal (**1**) bar in the electrical cabinet (see black arrow).

2. Connect either the **Normally Open** or the **Normally Closed** lead to the **Flow Switch 2** terminal (**2**) on the main terminal block in the electrical cabinet (see blue arrow).

3. Refer to the Local Controller Operations Guide (PB0002500) for instructions on how to configure the flow switch settings pop-up window to **Normally Open** or **Normally Closed**, whichever is appropriate.

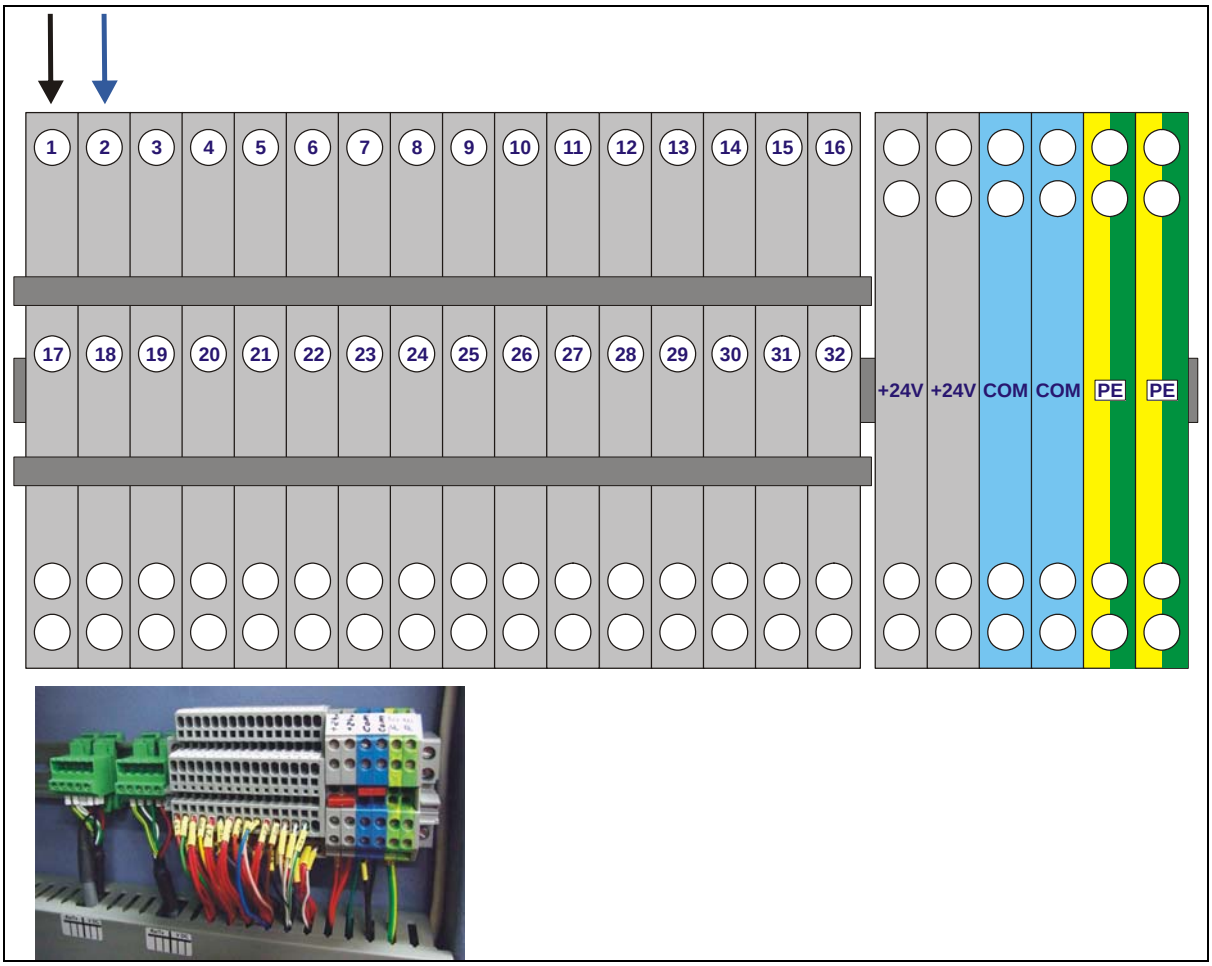

Figure 13: Flow Switch Connections

Additional Flow Switches Option

It is possible to install and connect additional flow switches to the system if desired, one at the inlet side of the unit and – in a dual-branch system - one at the inlet side of **each** unit.

The additional flow switches are connected to the units' junction boxes.

1. Connect the N.O. wire (A) of the 1st flow switch to DI1+ (J7, 1) and the COM wire (B) to +24V (J4, 9).

2. Connect the N.O. wire (A) of the 2nd flow switch to DI2+ (J7, 3) and the COM wire (B) to +24V (J4, 10).

Refer to the following figures:

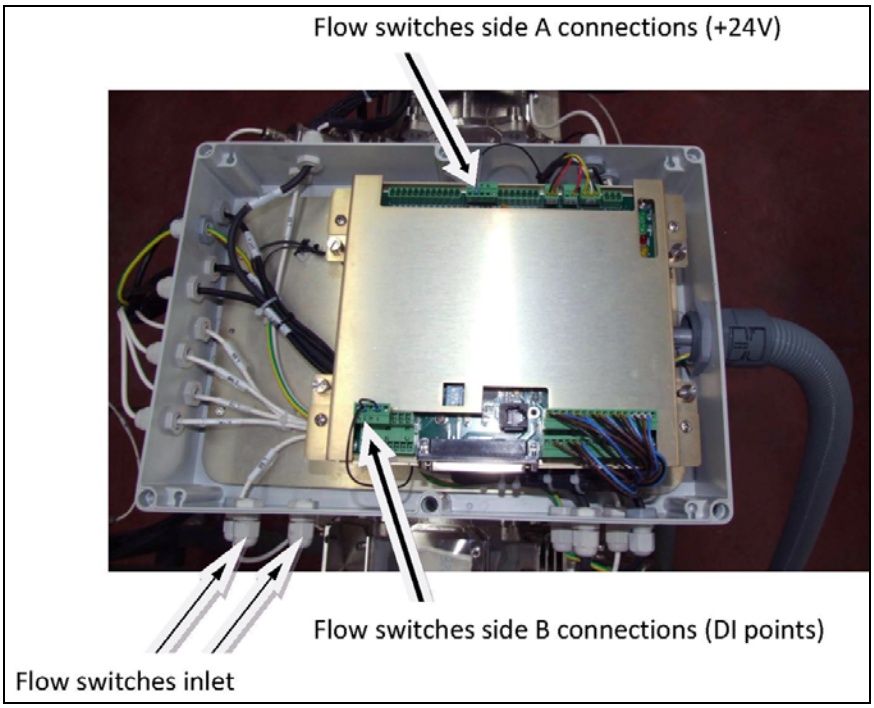

Figure 14: Additional Flow Switch Connections (1)

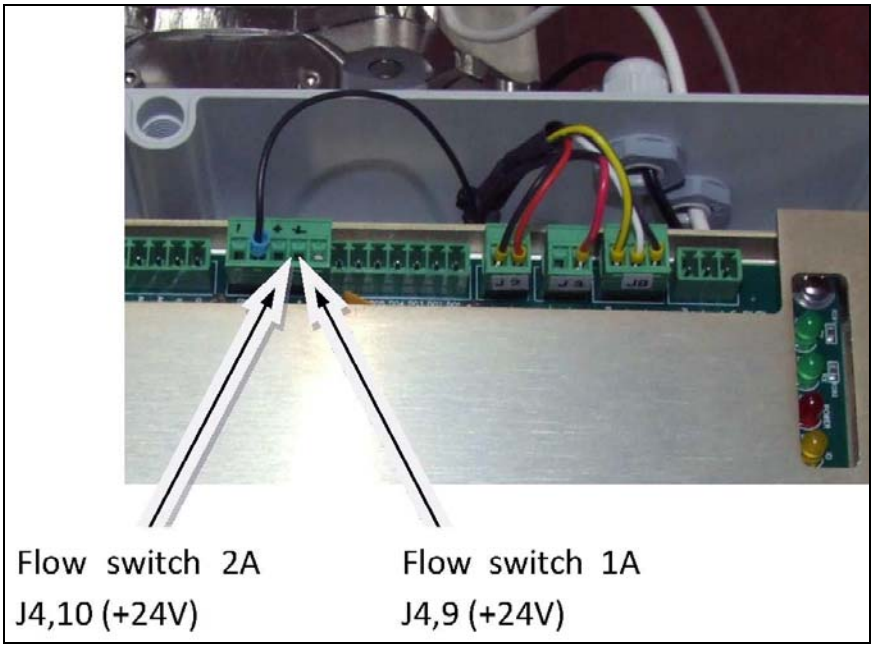

Figure 15: Additional Flow Switch Connections (2)

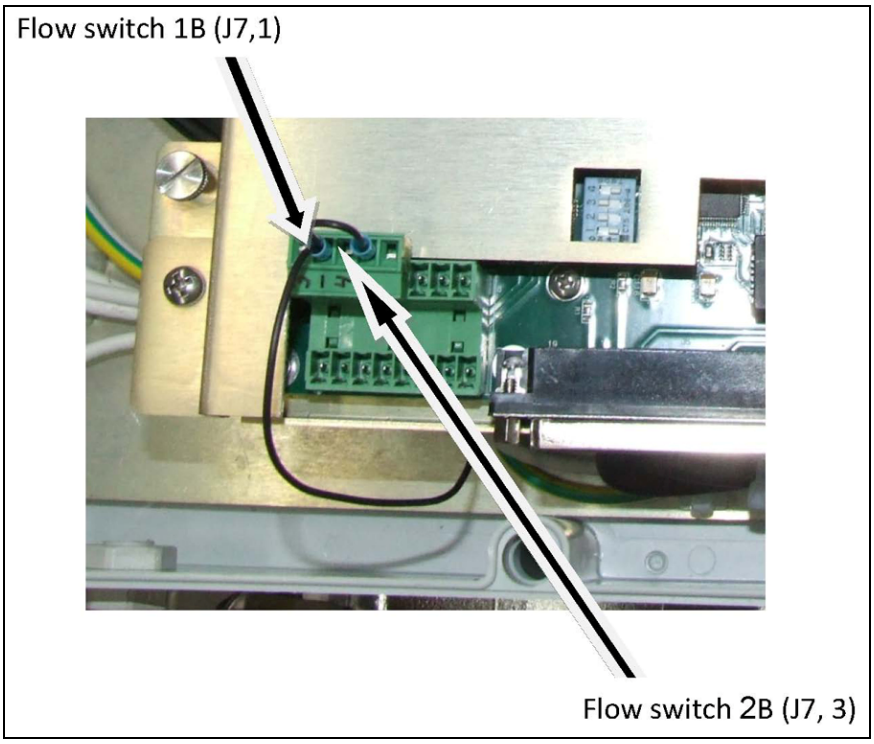

Figure 16: Additional Flow Switch Connections (3)

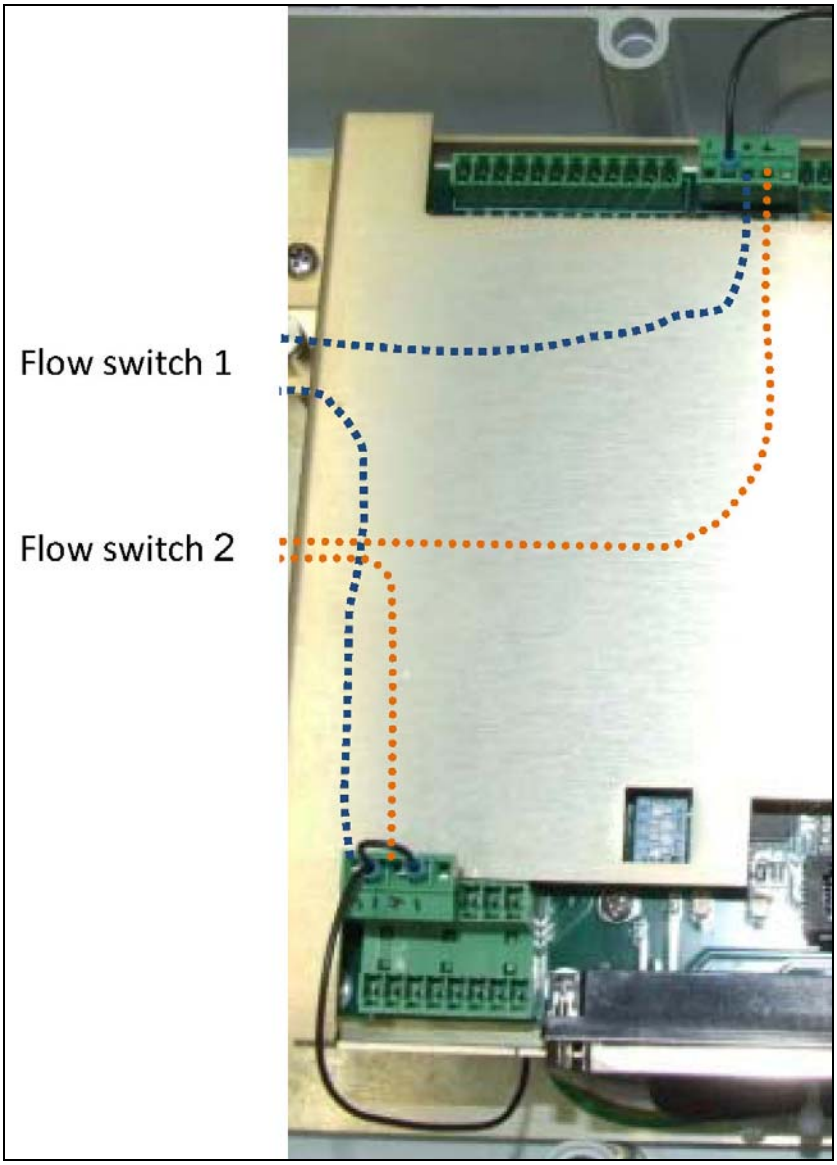

Figure 17: Additional Flow Switch Connections (4)

Connecting the Remote Controller to the Electrical Cabinet[6]

Refer to Figure 18:

1. Connect the **Plus** (**+**) lead from the remote controller to the **On/Off Input +** connection port (**5**) in the main terminal bar (see **blue** arrow).

2. Connect the **Minus** (**–**) lead from remote controller to the **On/Off Input –** connection port (**6**) in the main terminal bar (see **red** arrow).

Important Note

- Maximum On Voltage: +60 VDC
- Minimum On Voltage: +10 VDC
- Maximum Off Voltage: +4 VDC
- Minimum Off Voltage: -10 VDC

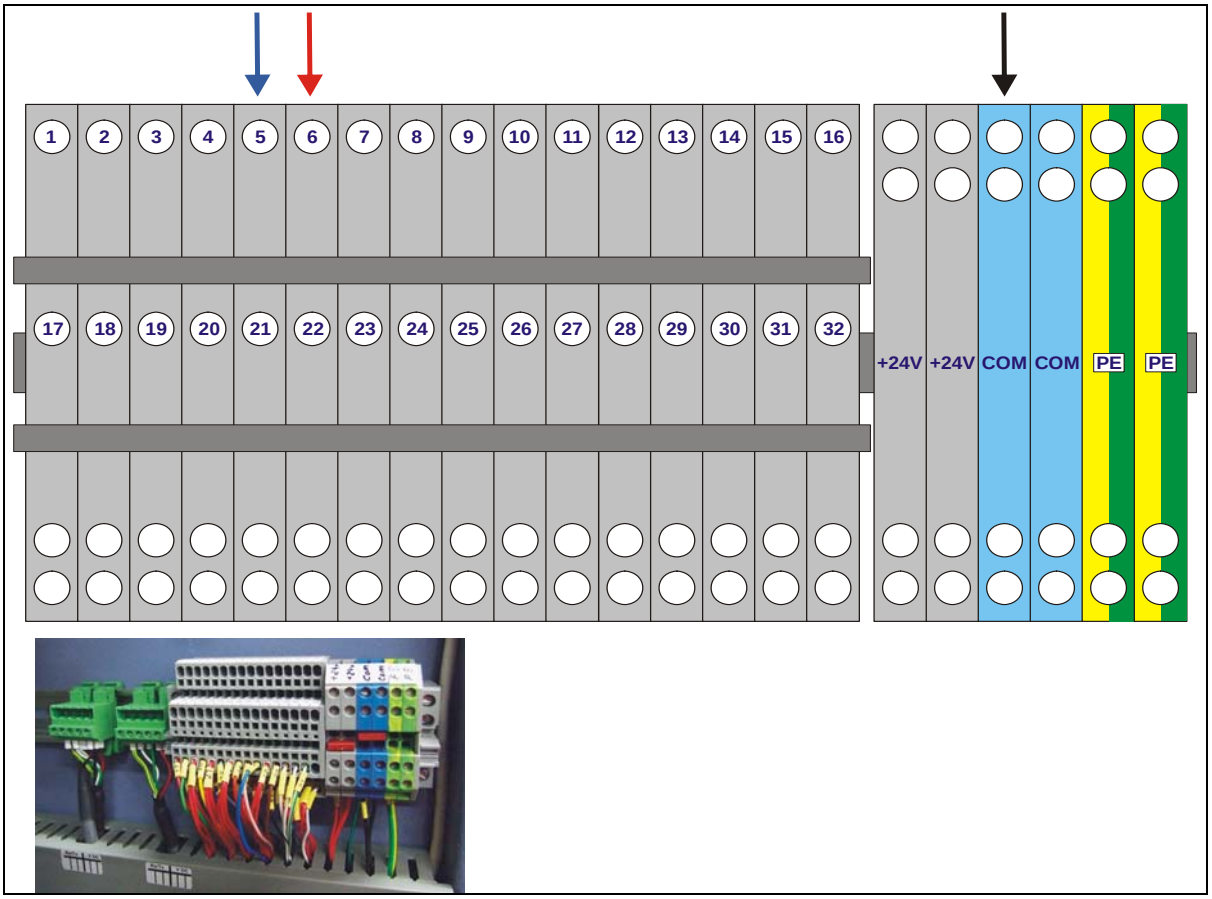

Figure 18: Remote Controller Connections

[6] Optional installation

Connecting the Remote Alarm to the Electrical Cabinet[7]

Refer to Figure 19:

1. **For a Normally Open (N.O.) configuration:** connect one lead from the remote alarm mechanism to the # **31** (**Alarm N.O.**) connection port in the main terminal bar, and the other lead to the # **29** (**Alarm Com.**) connection port (see red arrows).

2. **For a Normally Closed (N.C.) configuration:** connect the other lead from the remote alarm mechanism to the # **30** (**Alarm N.C.**) connection port in the main terminal bar, and the other lead to the # **29** (**Alarm Com.**) connection port (see blue arrows).

> ***Important Note***
>
> The alarm output is a dry contact and can carry up to 240 VAC / 2A (between ports **29** and **30** or **29** and **31**).

Refer to the Local Controller Operations Guide (PB0002500) for remote alarm configuration instructions in the system's software application.

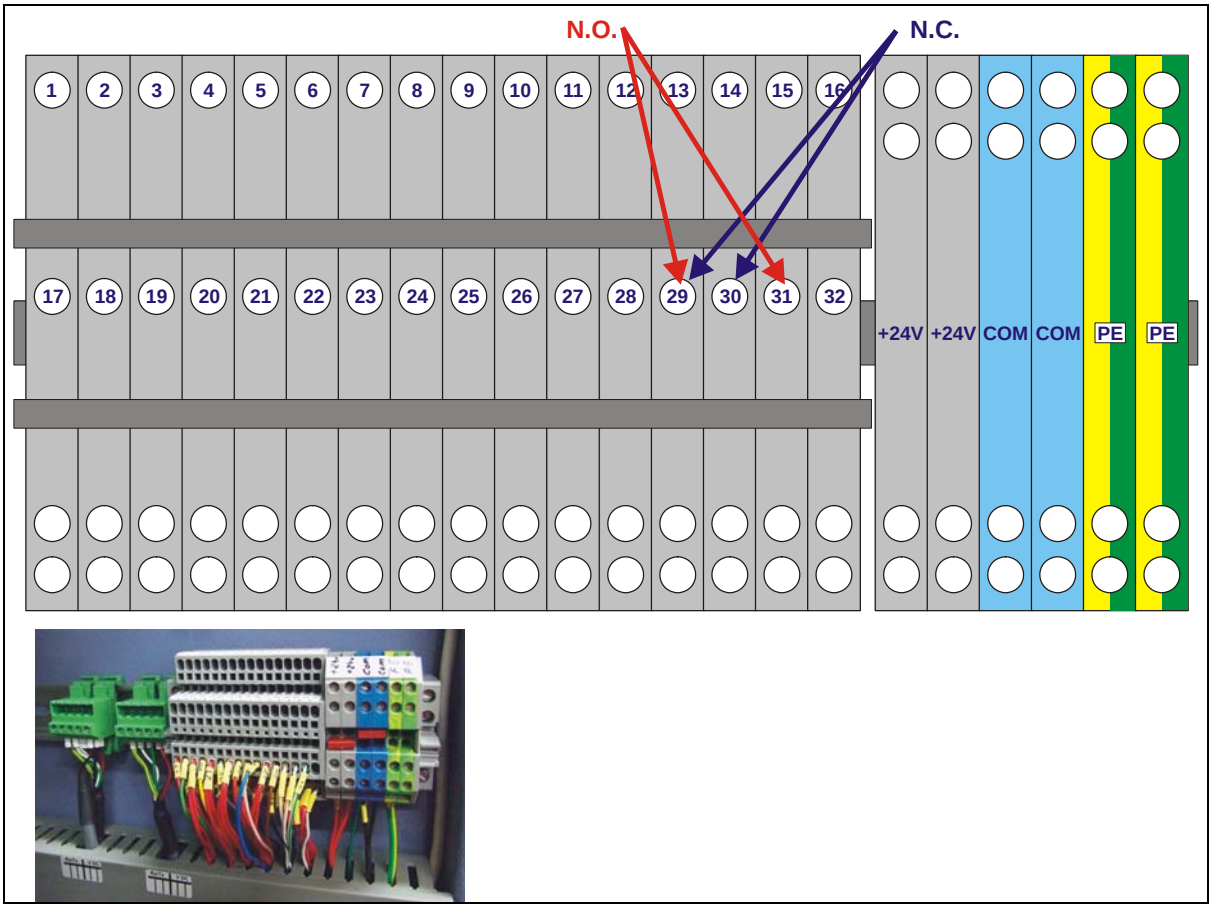

Figure 19: Remote Alarm Connections

[7] Optional installation

Connecting the Auto Valves[8] to the Electrical Cabinet[9]

Refer to Figure 20:

1. **Inlet Valve** (blue arrows):

- Connect the inlet valve's **Plus** + lead to the **In Valve Control +** (**15**) connection port in the main terminal bar.
- Connect the inlet valve's **Minus** – lead to the **In Valve Control –** connection port (**16**) in the main terminal bar.

2. **Outlet Valve** (green arrows):

- Connect the outlet valve's **Plus** +lead to the **Out Valve Control +** connection port (**17**) in the main terminal bar.
- Connect the outlet valve's **Minus** – lead to the **Out Valve Control –** connection port (**18**) in the main terminal bar.

3. **Bypass Valve** (red arrows):

- Connect the bypass valve's **Plus** + lead to the **Bypass Control +** connection port (**13**) in the main terminal bar.
- Connect the bypass valve's **Minus** – lead to the **Bypass Control –** connection port (**14**) in the main terminal bar.

Refer to the Local Controller Operations Guide (PB0002500) for auto valves configuration instructions in the system's software application.

Important Note

- Maximum digital output current: 1.5 Amps DC.
- The Out Valve Control **+** signal indicates that the system is ready for normal operation.

[8] The Atlantium system can accommodate up to 3 auto valves, such as isolation valves before and after the system, and bypass valves.
[9] Optional installation

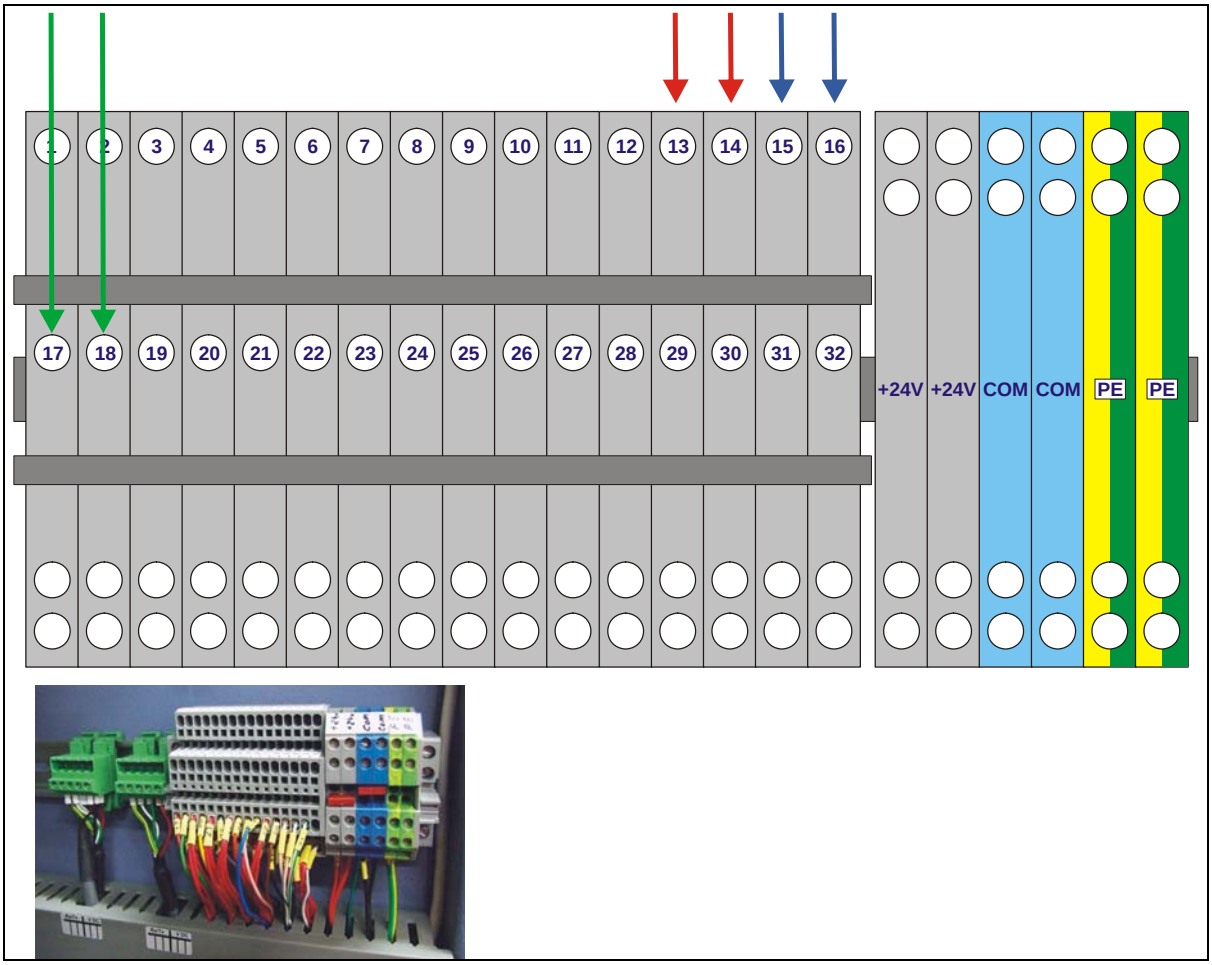

Figure 20: Auto Valves Connections

Sampling Valve Installation

If the sampling valves were purchased from Atlantium:

- **For Stainless Steel Pipes:** the 1 inch clamp fitting (see Figure 5) must be welded at a horizontal orientation (3 or 9 o'clock).

  Welding the 1 inch clamp fitting to your pipes should be followed by a polishing process for achieving a smooth area on the external and internal part of the pipes, and should be passivated to avoid corrosion.

- **For Plastic Pipes:** Thread the clamp fitting to the port.

Connect the aseptic sampling valves (see Figure 21), using the supplied 1" tri-clamp fitting, to any 1 inch tri-clamp fitted port, on the inlet and outlet sides of the water line.

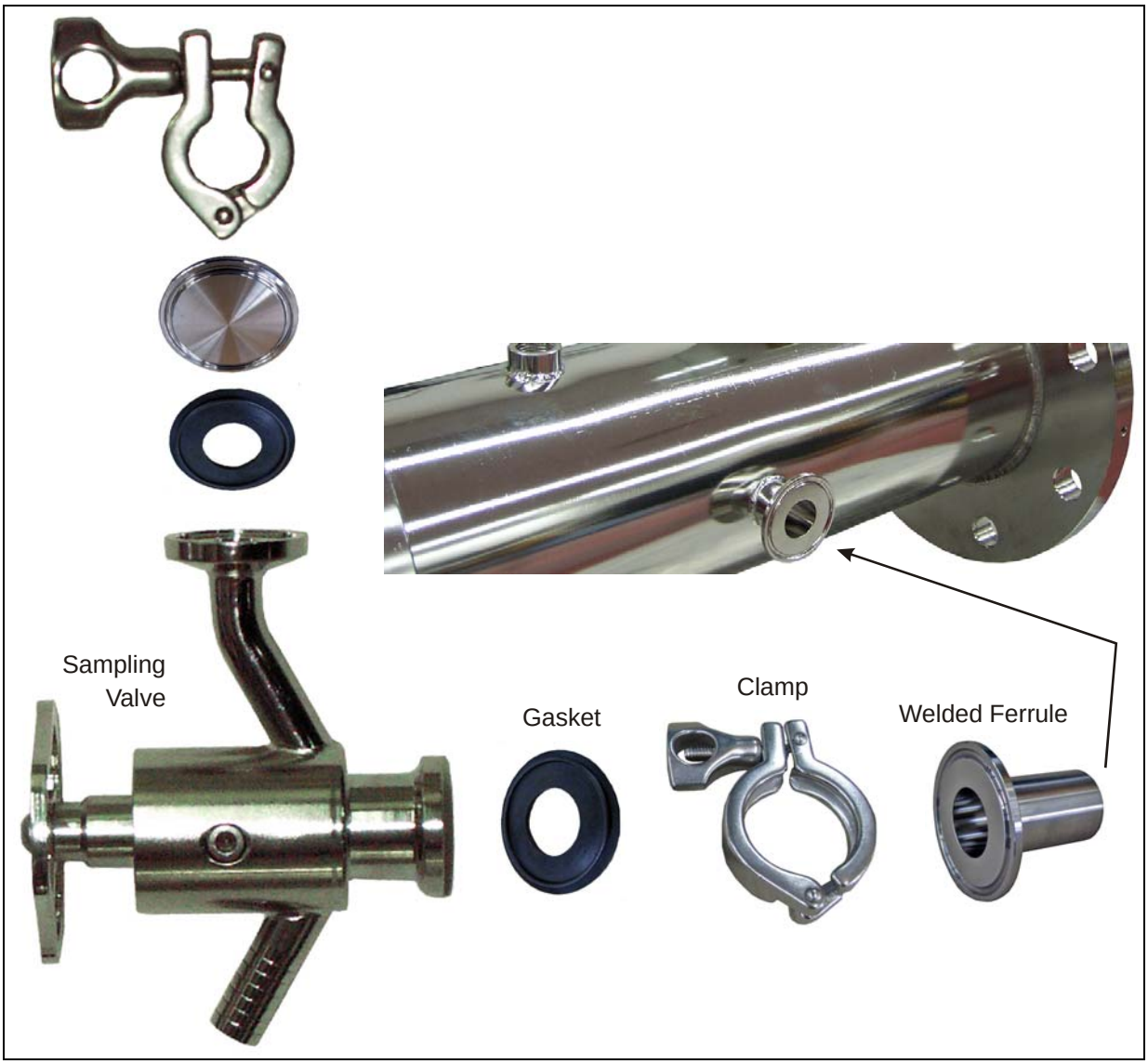

Figure 21: Sampling Valve Assembly

CIP and Draining Valves Installation

Refer to Figure 5:

Atlantium recommends using high-quality, sanitary equipment 1 inch tri-clamp on both sides to enable connection of the CIP kit.

The 1 inch ferrule (see Figure 22) must be welded or threaded at a vertical orientation:

- **Draining Valve:** at a 6:00 o'clock orientation on one side of the unit.
- **CIP Valve:** at a 12:00 o'clock orientation on other side of the unit.

Welding the 1 inch clamp fitting to your pipes should be followed by a polishing process for achieving a smooth area on the external and internal part of the pipes, and should be passivated to avoid corrosion.

For Plastic Pipes: Thread the clamp fitting to the port.

Connect the valves to their ports using their tri-clamp fittings. When not using the valves close the valve outlet using the tri-clamp cover.

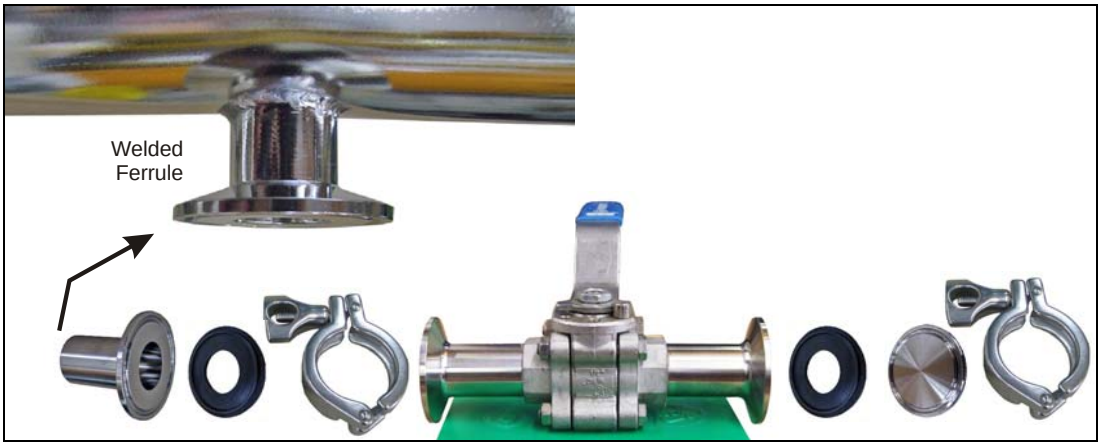

Figure 22: CIP and Draining Valves Installation

CLEANING THE UNIT

The inner surfaces of the Atlantium system's unit should be cleaned by COP or CIP at installation, before start-up and/or commissioning.

Please refer to the Atlantium System Maintenance Guide (P/N # PBF003400) for complete instructions on how to clean the unit's inner surfaces.

STARTING UP THE UNIT

Refer to the Maintenance Guide for more detailed instructions – this commissioning process will be performed by Atlantium's representative:

- Set the specific site parameters into the software's **Technician** mode screens.
- Open the breather caps (2 on each side of the lamp – total 4 per lamp, see Figure 23).
- Start up the system
- Let the system operate for at least 1 hour.
- Close all breather caps.
- Calibrate peripheral equipment (flow meter, etc.).
- Calibrate the HOD system after it has stabilized.
- Repeat HOD system calibration after 100 hours of operation*.

(*) Important Note

To be performed only by an authorized site-trained technician.

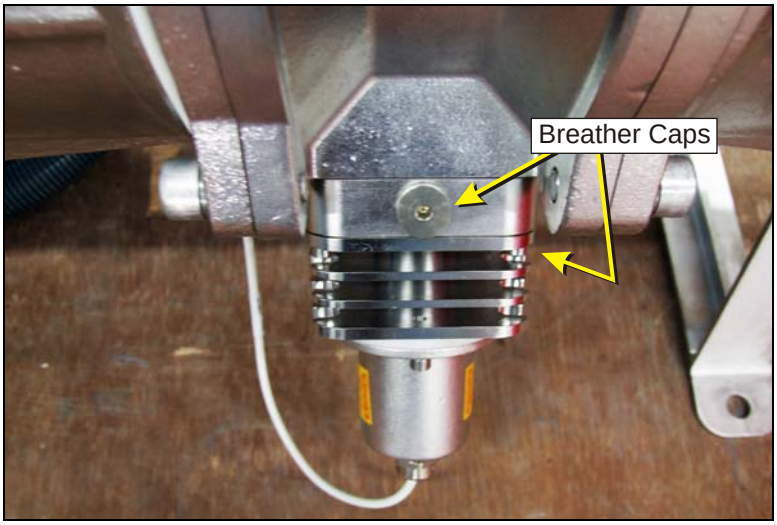

Figure 23: Lamp Breather Caps

DETERMINATION OF THE FREE-CHLORINE ALARM THRESHOLD[10]

Two Free-Available Chlorine (**FAC**) mass concentration monitoring techniques are common:

- Direct mass-concentration monitoring (typically in units of ppm)
- Indirect Oxidation-Reduction Potential (ORP) monitoring

Caution

The following calibration process needs to be performed while discharging the water to the drain, while ensuring that the water does not reach the membrane.

The calibration process will be done by using a Colorimeter device, such as the HACH® DR/890 Portable Colorimeter using the manufacturer's recommended reagents (http://www.hach.com/hc/search.product.details.invoker/PackagingCode=4847000/NewLinkLabel=DR%26frasl%3B890+Portable+Colorimeter).

Mass-Concentration Monitoring

If an online mass-concentration monitor is used (measure FAC concentration in ppm), then the following suggested procedure is practically a monitor-calibration procedure.

1. Lower the drive to the UV lamps.
2. Manually measure the FAC mass-concentration (should be 0.1 ppm[11] or higher).
3. Gradually increase the drive to the UV lamps until the Max-Allowed FAC mass-concentration value (typically 0.02 ppm) is manually measured.
4. Set the value shown by the on-line monitor to the manually measured value. The set value is the **FAC Alarm Threshold**.
5. Increase the UV power further to achieve actual FAC below FAC Alarm Threshold.

ORP Monitoring

Oxidation-Reduction Potential (**ORP**) is a parameter of your specific water. The ORP level will increase or decrease as a function of the FAC mass- concentration levels assuming that other water parameters are kept constant.

Thus, the ORP Alarm Threshold (in mV) can be used to replace the FAC Alarm Threshold. However, since this value depends on your specific water Oxidation-Reduction Potential it is necessary to calibrate the ORP alarm threshold according to your specific conditions.

[10] Only for de-chlorination applications
[11] Parts per million

The ORP Alarm Threshold calibration process will be done by measuring the actual FAC levels and comparing them to the ORP specific values and by this setting the ORP threshold levels.

1. Lower the drive to the UV lamps.

2. Manually measure the FAC mass-concentration (should be 0.1 ppm or higher).

3. Gradually increase the drive to the UV lamps until a Max-Allowed FAC mass-concentration value (typically 0.02 ppm) is manually measured.

4. The displayed ORP value (mV) at that point is the ORP Alarm Threshold.

5. Increase the UV power further to achieve actual ORP below ORP Alarm Threshold.

SYSTEM SPECIFICATIONS AND SCHEMATICS

Please refer to the Atlantium RZ163 Product Line System Specifications guide (PBF006300) to view the system specifications, electrical schematics and diagrams.